health at home, inc. Model RBSP 5436 BF 1.0 Pan

Comfort Series
SUBMITTAL DATA

TOP VIEW

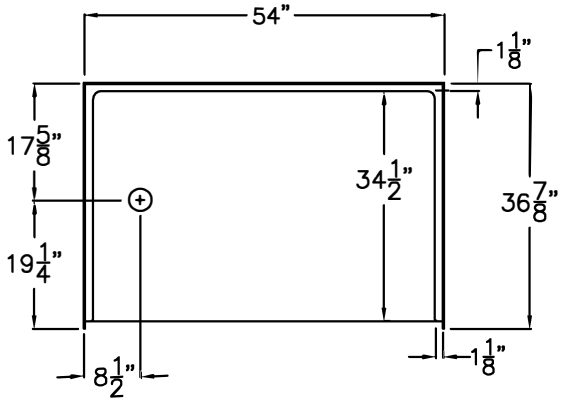

SIDE VIEW

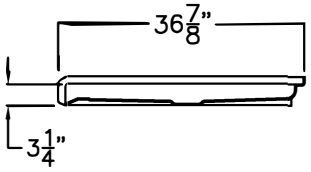

FRONT VIEW

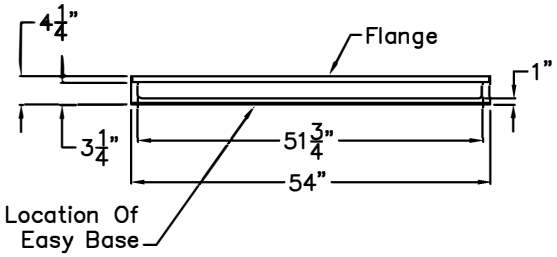

Shower Pan

This shower pan shall be RBSP 5436 BF 1.0 right or left drain. Finished surface shall be of sanitary–grade applied acrylic. The unit shall have outside dimensions of 54" x 36 7/8" x 4 1/2". The unit shall meet IAPMO Z124–2011, and CSA B45.5–11.

The enclosure shall be equipped with the following factory installed accessories:
1) Right or left drain location,
2) Factory installed Easy Base self sustaining bottom,
3) 1.0" threshold.

Detail of 1.0" Threshold

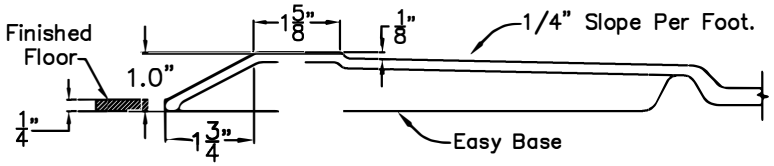

DUE TO THE NATURE OF THE MATERIALS INVOLVED UNIT DIMENSIONS MAY VARY ± 1/2 INCH

Job Name:	Health at Home, Inc.
Approved By Print Name:	Drawing#: MPB 5436 BF 1.0 PAN
Approved By Signature: Date:	Date: 3–31–09 Revised: 11–15–16
Rep.: Wholesaler:	Quote No.

ORDER ENTRY BY FAX 888.802.8186 OR EMAIL orders@healthathomeinc.com
Office 704.960.0148 or 980.900.2845 www.healthathomeinc.com

Recyclable Paper

Products that enhance safety, vitality, & longevity at home.